Technical data "HAPERT" twin axle model H-

H- Transporter

H- Multi

H- Auto

Dimensions / weights		H2700 350x160 MULTI	H3500 350x160 MULTI	H2700 425x190 transporter	H3000 425x205 transporter	H3500 500x205 transporter	H2700 425x190 AUTO	H3500 500x205 AUTO
Maximum Gross Weight		2700	3500	2700	3000	3500	2700	3500
Empty weight		670	725	700	780	840	675	860
Loading capacity		2030	2775	2000	2220	2660	2025	2640
Interiour length	[A]	348	348	423	423	498	425	500
Interiour width	[B]	160	160	190	205	205	190	205
Length drawbar	[C]	150	156	150	156	156	150	156
Total length	[D]	508	514	584	590	665	610	691
Total width	[E]	204	204	234	249	249	234	249
Total height	[F]	111	114	101	104	104	60	63
Height of the loading floor	[G]	41	44	41	44	44	40	43
Height of coupling	[H]	43	46	43	46	46	42	45
Height of the sides	[I]	17	17	18	18	18	18	18
Height of binding rail	[J]	15	15					
Drive-angle	[K]	10°	10°	8°	8°	9°	8°	9°
Tyre size		155/70R12	155/70R12	155/70R12	155/70R12	155/70R12	155/70R12	155/70R12

Options / weights	
Long tailramp	35 kg.
Aluminium tearplate on the floor	
Dimensions trailer 350x160:	50 kg.
Dimensions trailer 425x190:	75 kg.
Dimensions trailer 500x205:	95 kg.
High cover 180 cm. high	
Dimensions trailer 350x160:	105 kg.
Dimensions trailer 425x190:	140 kg.
Dimensions trailer 500x205:	175 kg.
High cover 210 cm. high	
Dimensions trailer 350x160:	120 kg.
Dimensions trailer 425x190:	155 kg.
Dimensions trailer 500x205:	190 kg.

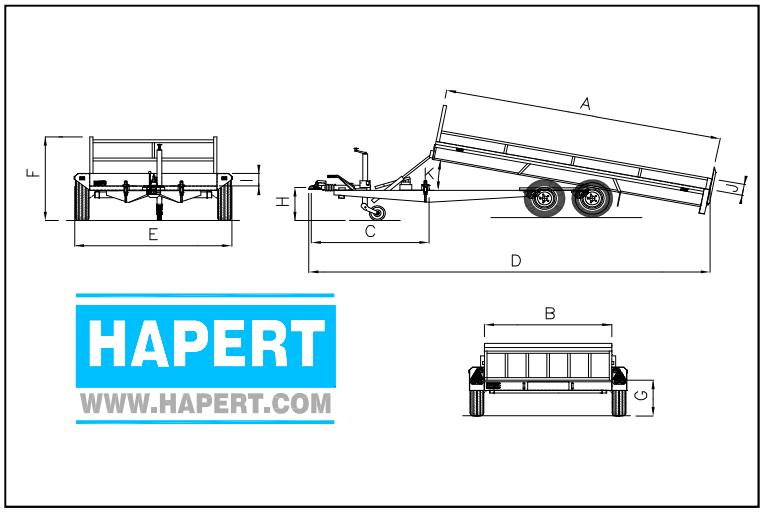

Dimensions in cm, weights in kg.

All specifications are subject to change

Edition: 11.09H